MODEL 222
Schematic,Socket
MODEL 250-B
Schematic

AIR-KING PRODUCTS CORP.

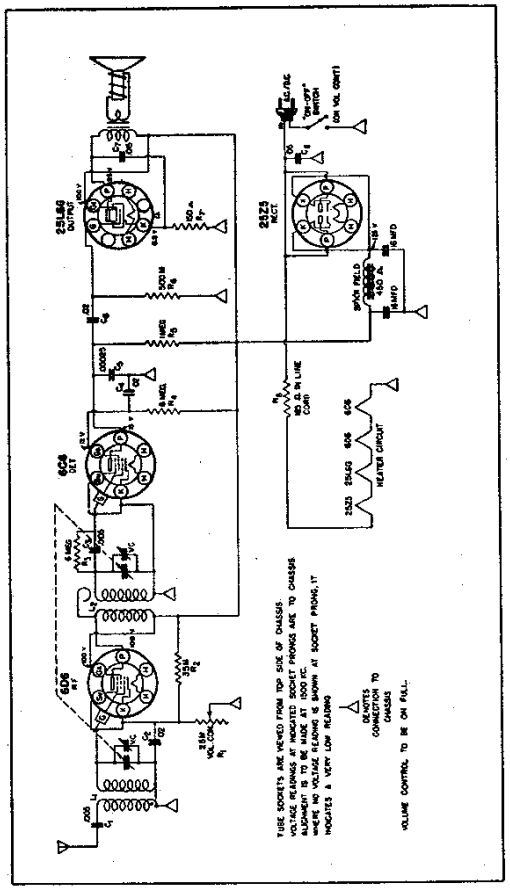

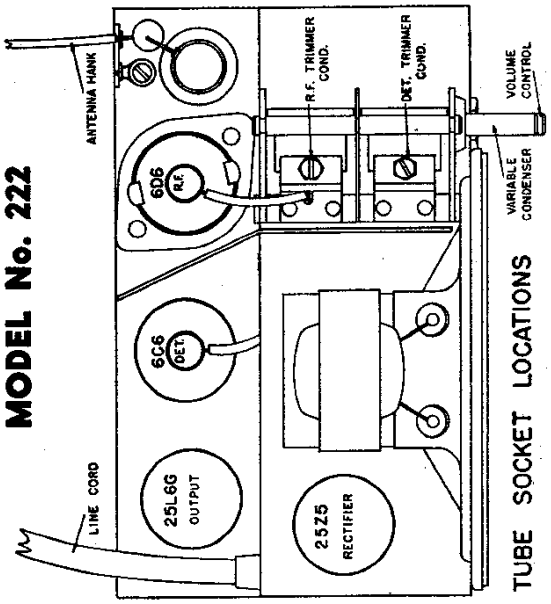

Do not connect ground wire to chassis.

The frequency range covered is 550-1700 kilocycles.

105-125 volts, 50-60 cycles, a.c. or d.c. power

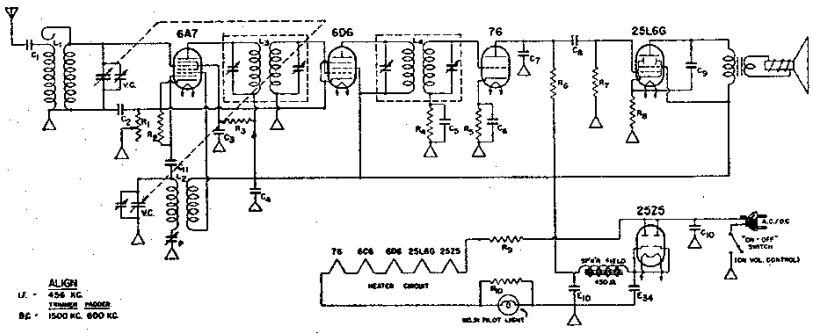

R_1 -	7,500	OHM	VOL. CONTROL
R_2 -	50,000	"	1/4 WATT
R_3 -	35,000	"	" "
R_4 -	6,000,000	"	" "
R_5 -	200,000	"	" "
R_6 -	1,000,000	"	" "
R_7 -	500,000	"	" "
R_8 -	150	"	1 "
R_9 -	143	"	IN LINE CORD
R_{10} -	31	"	3 WATT

L_1 - ANTENNA COIL
L_2 - OSCILLATOR COIL
L_3 - 456 KC. INPUT I.F.
L_4 - 456 KC. OUTPUT I.F.

P - 700 MMF. MAX. PADDER

E_{10} - 10 MFD. 150 V.W.
E_{34} - 34 " " "

V.C. - 410 MMF MAX. VARIABLE COND

C_1 -	.005	-	600 V.
C_2 -	1	-	200 V.
C_3 -	.05	-	"
C_4 -	.05	-	"
C_5 -	.005	-	600 V.
C_6 -	1	-	200 V.
C_7 -	.0005	-	MICA
C_8 -	.05	-	200 V.
C_9 -	.01	-	400 V.
C_{10} -	.05	-	"
C_{11} -	.0001	-	MICA

105-125 volts, 50-60 cycles AC or DC

The frequency range covered is 540-1750 kilocycles.

CAUTION - Do Not Connect Ground Wire to Chassis.

©John F. Rider, Publisher

Courtesy Nostalgia Air

AIR KING PRODUCTS CORP.

MODELS 221,222,223
Regent, Autocrat
Council
Schematic, Notes

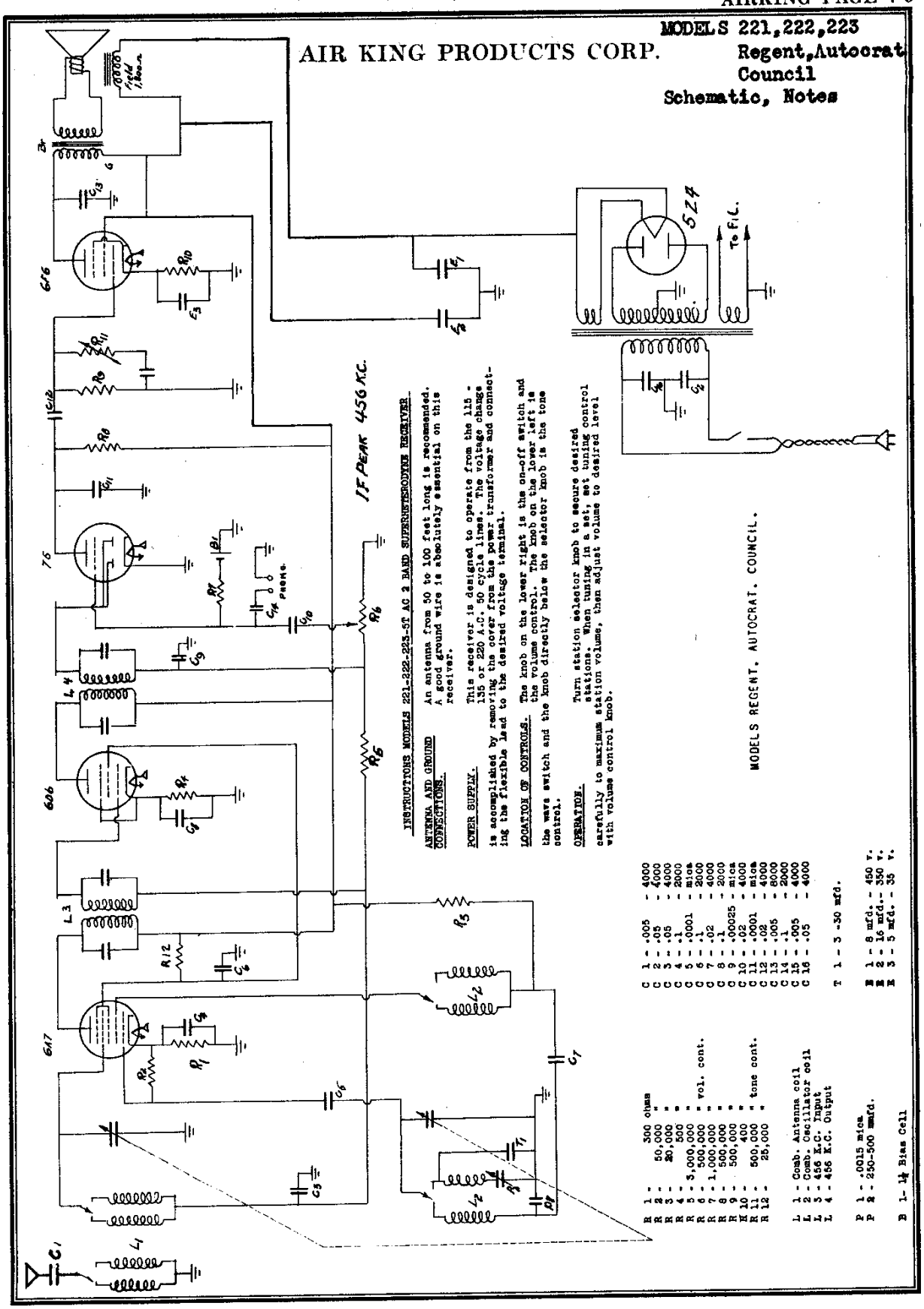

©John F. Rider, Publisher

Courtesy Nostalgia Air